Intermediate trunnion model F
Series 40-60 and Series 41-61
Operating instructions

Made in Italy

Model F Series 40-60

Orientations possibles on the cylinders

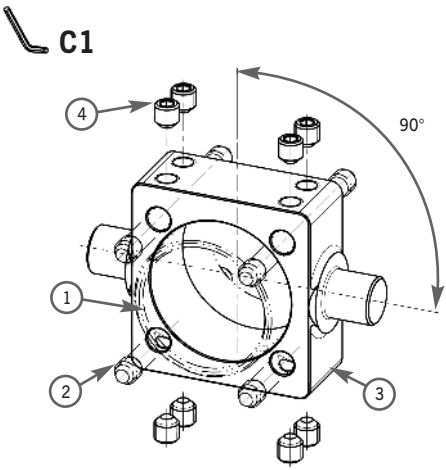

- Insert the tube (1) and the ties (2) into the trunnion (3)
- Reassemble completely the cylinders
- Fix the trunnion in the desired position screw the screws (4) at the torque indicated in the table

C1 = Screw torque

ø	Series 40-60 **C1** (Nm)
32	5 ± 1
40	5 ± 1
50	15 ± 2
63	15 ± 2
80	25 ± 3
100	25 ± 3
125	35 ± 5
160	45 ± 5
200	45 ± 5

93-7531-0006 rev.C

Model F Series 41-61

Orientations possibles on the cylinders

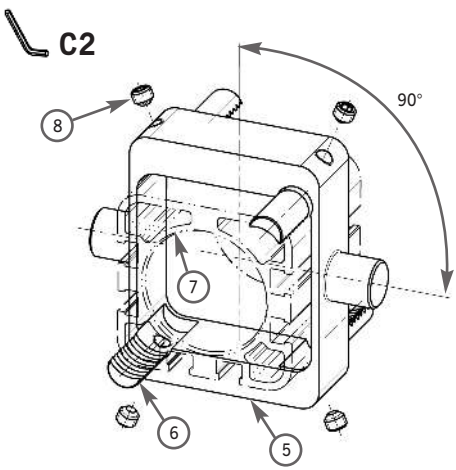

- Insert the trunnion (5) on the cylinder
- Put the inserts (6) supplied with the kit in the slots
- Fix the trunnion on the profile (7) in the desired position screw the screws (8) at the torque indicated in the table

C2 = Screw torque

ø	Series 41-61 **C2** (Nm)
32	3 ± 1
40	4 ± 1
50	6 ± 1
63	8 ± 1
80	18 ± 2
100	25 ± 2
125	35 ± 2
160	30 ± 3
200	30 ± 3

Camozzi spa
Via Eritrea, 20/I - 25126 Brescia - Italy
Tel. +39 030 37921 - Fax +39 030 2400464
info@camozzi.com