Series PN
directly operated solenoid valves

3/2-way - Normally Closed (NC)

- Can be mounted on a single base (M5 connections) or on manifold (M5 connections or cartridge ø 3 and 4)
- Compact design suitable for use in reduced mounting space

Please note that all Series PN solenoid valves are supplied with direct current (DC). To operate in alternating current (AC), it is necessary to use the connector with bridge rectifier Mod. 125-900.

Series PN directly operated solenoid valves are available as 3/2-way NC.
They are equipped with a manual override which makes the plants setting easier and they can be mounted on single bases or on manifolds.

GENERAL DATA

TECHNICAL FEATURES	
Function	3/2 NC
Operation	direct acting poppet type
Pneumatic connections	on subbase with ISO 12238 interface by means of screws
Nominal diameter	0.8 mm
Nominal flow	12 Nl/min (air @ 6 bar ΔP 1 bar)
Flow coefficient kv (l/min)	0.19
Operating pressure	0 ÷ 10 bar
Operating temperature	0°C ÷ 50°C
Media	filtered air, class 5.4.4 according to ISO 8573-1 (max oil viscosity 32 cSt), inert gas
Response time (ISO 12238)	ON <10 msec - OFF <15 msec
Installation	in any position
MATERIALS IN CONTACT WITH THE MEDIUM	
Body	PBT technopolymer
Seals	PU, NBR, (FKM on demand)
Internal parts	stainless steel
ELECTRICAL FEATURES	
Voltage	24 … 205 V DC
Voltage tolerance	±10%
Power consumption	2 W - 1 W (24 V DC only)
Duty cycle	ED 100%
Electrical connection	with industrial standard connector (9.4 mm)
Protection class	IP65 with connector
Special versions available on demand	

Products designed for industrial applications.
General terms and conditions for sale are available on www.camozzi.com.

CODING EXAMPLE

PN	0	00	-	3	0	1	-	P	5	3	

PN	SERIES
0	BODY DESIGN: 0 = single sub-base 1 = single manifold 2 = double sided manifold
00	NUMBER OF POSITIONS: 00 = interface 01 = single base (M5 only) 02 ÷ 99 = manifold number of positions
3	NUMBER OF WAYS - FUNCTIONS: 0 = manifold or single base 3 = 3-way NC
0	VALVE PORTS: 0 = interface (for single valve only) MANIFOLD PORTS (for Series W, P and PN): 2 = M5 side port 3 = ø 3 tube side port 4 = ø 4 tube side port 6 = M5 rear ports 7 = ø 3 tube rear ports 8 = ø 4 tube rear ports
1	NOMINAL DIAMETER - MAX PRESSURE 1 = ø 0,8 (1W) 10 bar (NC) 24V only
P	MATERIALS: P = PBT body, PU poppet seal
5	ELECTRICAL CONNECTION: 5 = industrial standard connection (9.4 mm)
3	SOLENOID VOLTAGE: 3 = 24V DC 4 = 48V DC 6 = 110V DC 7 = 205V DC
	FIXING: = standard for the mounting on plastic interfaces M = with screws for the mounting on metal interface (on demand)

Products designed for industrial applications.
General terms and conditions for sale are available on www.camozzi.com.

3/2-way NC solenoid valve

Supplied with:
1x interface seal
2x screws

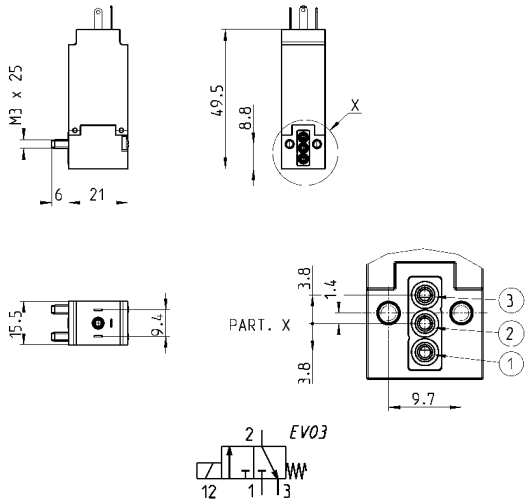

Mod.	Orifice Ø (mm)	kv (l/min)	Qn (Nl/min)	Pressure min-max (bar)
PN000-301-P53	0.8	0.18	12	0 ÷ 10

Single sub-base

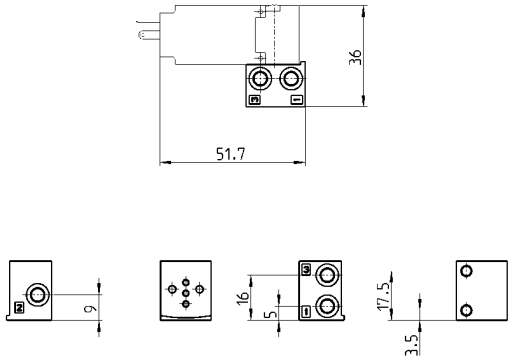

Mod.
P001-02

Single manifold with rear outlets

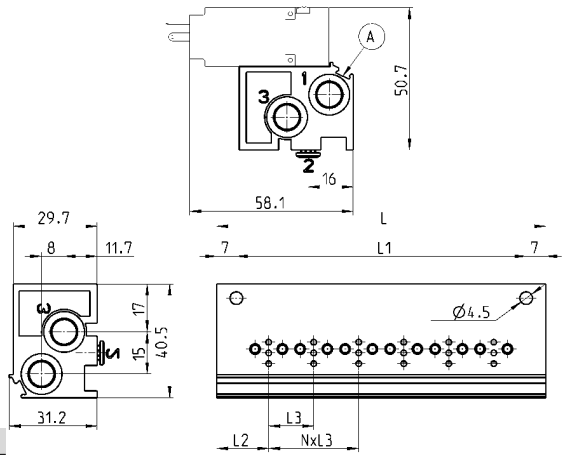

Mod.	Nr valves	L	L1	L2	L3	1 (P)	3 (R)
P102-0*	2	53	39	18,5	16	G1/8	G1/8
P103-0*	3	69	55	18,5	16	G1/8	G1/8
P104-0*	4	85	71	18,5	16	G1/8	G1/8
P105-0*	5	101	87	18,5	16	G1/8	G1/8
P106-0*	6	117	103	18,5	16	G1/8	G1/8

* = see the type of PORTS in the CODING EXAMPLE TABLE.

A = groove for electric connection identification

Products designed for industrial applications.
General terms and conditions for sale are available on www.camozzi.com.

Single manifold with front outlets

This manifold is arranged to be fixed through DIN 46277/3 guide together with the accessory PCF-E520.

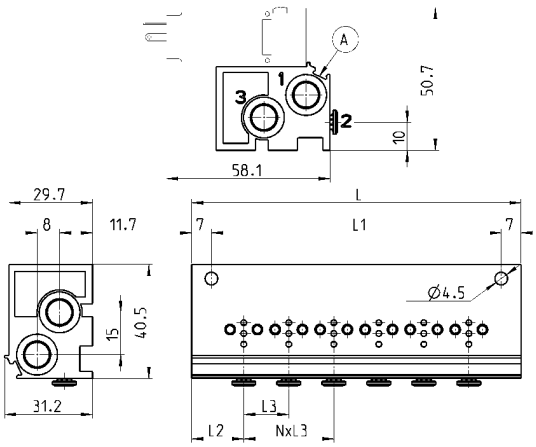

Mod.	Nr valves	L	L1	L2	L3	1 (P)	3 (R)
P102-0*	2	53	39	18,5	16	G1/8	G1/8
P103-0*	3	69	55	18,5	16	G1/8	G1/8
P104-0*	4	85	71	18,5	16	G1/8	G1/8
P105-0*	5	101	87	18,5	16	G1/8	G1/8
P106-0*	6	117	103	18,5	16	G1/8	G1/8

* = see the type of PORTS in the CODING EXAMPLE TABLE.

A = groove for electric connection identification

Double sided manifold with rear outlets

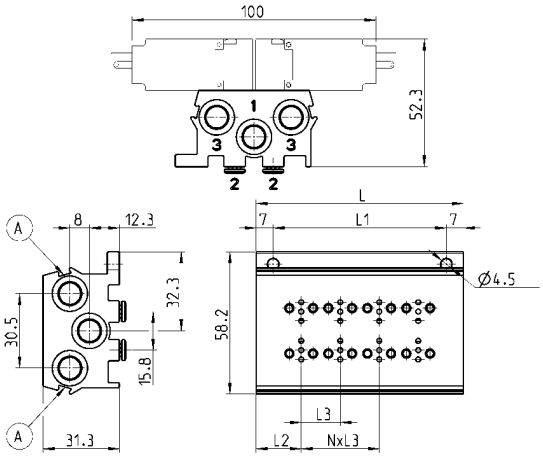

Mod.	Nr valves	L	L1	L2	L3	1 (P)	3 (R)
P204-0*	4	53	39	18,5	16	G1/8	G1/8
P206-0*	6	69	55	18,5	16	G1/8	G1/8
P208-0*	8	85	71	18,5	16	G1/8	G1/8
P210-0*	10	101	87	18,5	16	G1/8	G1/8
P212-0*	12	117	103	18,5	16	G1/8	G1/8

* = see the type of PORTS in the CODING EXAMPLE TABLE.

A = groove for electric connection identification

Double sided manifold with front outlets

This manifold is arranged to be fixed through DIN 46277/3 guide together with the accessory PCF-E520.

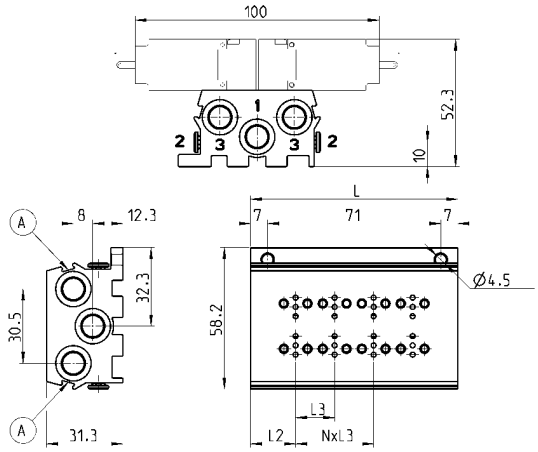

Mod.	Nr valves	L	L1	L2	L3	1 (P)	3 (R)
P204-0*	4	53	39	18,5	16	G1/8	G1/8
P206-0*	6	69	55	18,5	16	G1/8	G1/8
P208-0*	8	85	71	18,5	16	G1/8	G1/8
P210-0*	10	101	87	18,5	16	G1/8	G1/8
P212-0*	12	117	103	18,5	16	G1/8	G1/8

* = see the type of PORTS in the CODING EXAMPLE TABLE.

A = groove for electric connection identification

Products designed for industrial applications.
General terms and conditions for sale are available on www.camozzi.com.

Excluder tap

Supplied with:
1x excluder tap
1x interface seal
2x screws

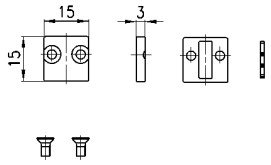

Mod.
P000-TP

Industrial standard (9.4 mm) connector Mod. 125-...

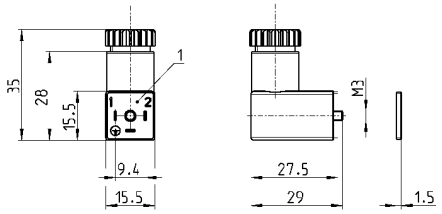

Mod.	description	colour	working voltage	cable holding	tightening torque
125-601	connector, diode + Led	transparent	10/50 V DC	PG7	0.3 Nm
125-701	connector, varistor + Led	transparent	24 V AC/DC	PG7	0.3 Nm
125-800	connector, without electronics	black	-	PG7	0.3 Nm

1 = 90° adjustable connector

Industrial standard (9.4 mm) connector Mod. 125-... with cable

The internal rectifier circuit of the connector Mod. 125-900 allows to use solenoid valves with different AC voltage, even if the voltage indicated on the solenoid valve is DC.

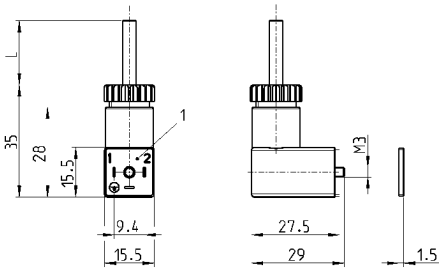

Mod.	description	colour	working voltage	cable length [L]	cable holding	tightening torque
125-501-2	moulded cable with diode + Led	black	10/50 V DC	2000 mm	-	0.3 Nm
125-550-1	moulded cable, without electronics	black	-	1000 mm	-	0.3 Nm
125-601-2	pre-wired cable, diode + Led	transparent	10/50 V DC	2000 mm	PG7	0.3 Nm
125-571-3	moulded cable, varistor + Led	black	24 V AC/DC	3000 mm	-	0.3 Nm
125-900	pre-wired cable with voltage rectifier	black	6 V - 110 V AC/DC	2000 mm	PG7	0.3 Nm

1 = 90° adjustable connector

Products designed for industrial applications.
General terms and conditions for sale are available on www.camozzi.com.

Industrial standard (9.4 mm) in-line connectors with cable

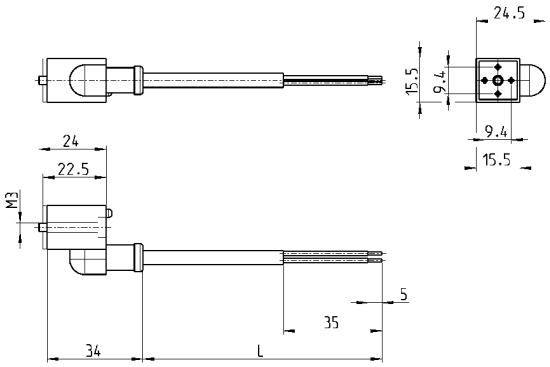

Mod.	description	colour	working voltage	cable length [L]	cable holding	tightening torque
125-503-2	in-line moulded cable, with diode + Led	black	24 V DC	2000 mm	-	0.3 Nm
125-503-5	in-line moulded cable, with diode + Led	black	24 V DC	5000 mm	-	0.3 Nm
125-553-2	in-line moulded cable, without electronics	black	-	2000 mm	-	0.3 Nm
125-553-5	in-line moulded cable, without electronics	black	-	5000 mm	-	0.3 Nm

Industrial standard (9.4 mm) in-line connectors with bridge rectifier

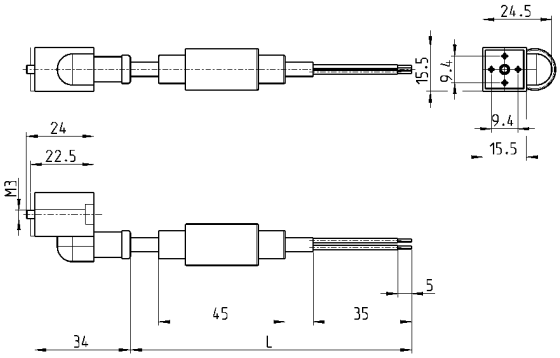

Mod.	description	colour	working voltage	cable length [L]	cable holding	tightening torque
125-903-2	in-line moulded cable with voltage rectifier	black	6 V - 230 V AC/DC	2000 mm	-	0.3 Nm
125-903-5	in-line moulded cable with voltage rectifier	black	6 V - 230 V AC/DC	5000 mm	-	0.3 Nm