# 2/2 WAY DIRECT ACTING SOLENOID VALVE, G 1/4″ ÷ G 1/2″

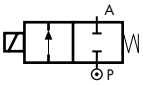


**normally closed**

**TYPE: D237/238/239**

## TECHNICAL SPECIFICATIONS

Media: water, oil, air
Media temperature: -10°C ÷ +130°C
Ambient temperature: -10°C ÷ +50°C
Body material: brass (CW617N EN 12165)
Pilot material: stainless steel
Seal material: FKM
Coil power: AC 18VA (holding)
AC 36VA (inrush)
DC 14W
Protection class: IP 65 (with connector)

## OPTIONS

EPDM seal for air and hot water MAX 120°C (e.g. code D239DEU)
NBR seal for air, water, oil MAX 90°C (e.g. code D237DBU)

## SELECTION TABLE

| VALVE | G connection | nominal diameter | flow rate Kvs | OPD min | OPD max AC | OPD max DC |
|---|---|---|---|---|---|---|
| code | [ISO 228 G] | [mm] | [l/min] | [barg] | [barg] | [barg] |
| D237DVU | 1/4″ | 10.5 | 21 | 0 | 0.4 | 0.2 |
| D238DVL | 3/8″ | 4.0 | 6 | 0 | 8 | 5 |
| D238DVN | 3/8″ | 5.0 | 7.5 | 0 | 5 | 2 |
| D238DVP | 3/8″ | 6.0 | 8.5 | 0 | 3.5 | 1.1 |
| D238DVU | 3/8″ | 10.5 | 24 | 0 | 0.4 | 0.2 |
| D239DVL | 1/2″ | 4.0 | 6 | 0 | 8 | 5 |
| D239DVN | 1/2″ | 5.0 | 7.5 | 0 | 5 | 2 |
| D239DVP | 1/2″ | 6.0 | 8.5 | 0 | 3.5 | 1.1 |
| D239DVU | 1/2″ | 10.5 | 25 | 0 | 0.4 | 0.2 |

| COILS | |
|---|---|
| code | [Volts/Hz] |
| 7250 | 24V DC |
| 7200 | 24V 50/60Hz |
| 7400 | 110V 50Hz - 120V 60Hz |
| 7600 | 200V 50Hz - 220V 60Hz |
| 7700 | 230V 50Hz - 240V 60Hz |

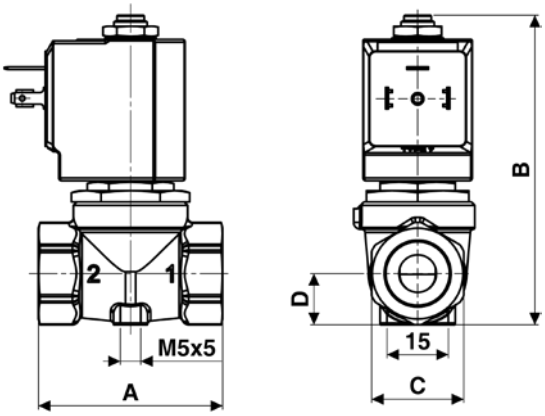


## DIMENSIONS & WEIGHTS

| G connection | A | B | C | D | weight |
|---|---|---|---|---|---|
| [ISO 228 G] | [mm] | [mm] | [mm] | [mm] | [kg] |
| 1/4″ | 54 | 89 | Hex 27 | 15 | 0.45 |
| 3/8″ | 54 | 89 | Hex 27 | 15 | 0.4 |
| 1/2″ | 54 | 89 | Hex 27 | 15 | 0.4 |

# 2/2 WAY DIRECT ACTING SOLENOID VALVE, G 1/8″ - G 1/4″

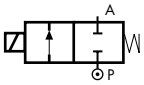


**normally closed**

**TYPE: D262/263**



## TECHNICAL SPECIFICATIONS

Media: water, oil, air
Media temperature: -10°C ÷ +130°C
Ambient temperature: -10°C ÷ +50°C
Body material: brass (CW617N EN 12165)
Orifice material: stainless steel (1.4305 EN 10088/AISI 303)
Operator: stainless steel
Seal material: foodgrade FKM A80
Coil power: AC 18VA (holding)
AC 36VA (inrush)
DC 14W
Protection class: IP 65 (with connector)

## OPTIONS

Normally open with class "H" coils only (e.g. code RD263DVG 7701)
Manual override (e.g. code D262DVHM) only up to Ø 3 mm orifice
EPDM seal for air and hot water MAX 120°C (e.g. code D262DEH)
Ruby seal -10°C +180°C for high temperature with class "H" coils only (e.g. code D262DRC 7201)
EEX proof version (please see page 43 for more information)

## SELECTION TABLE

| VALVE | G connection | nominal diameter | flow rate Kvs | OPD min | OPD max AC | OPD max DC |
|---|---|---|---|---|---|---|
| code | [ISO 228 G] | [mm] | [l/min] | [barg] | [barg] | [barg] |
| D262DVA | 1/8″ | 1.0 | 0.5 | 0 | 30 | 30 |
| D262DVC | 1/8″ | 1.5 | 1.3 | 0 | 24 | 24 |
| D262DVG | 1/8″ | 2.5 | 3.4 | 0 | 18 | 16 |
| D262DVH | 1/8″ | 3.0 | 4.5 | 0 | 15 | 8 |
| D263DVC | 1/4″ | 1.5 | 1.3 | 0 | 24 | 24 |
| D263DVG | 1/4″ | 2.5 | 3.4 | 0 | 18 | 16 |
| D263DVH | 1/4″ | 3.0 | 4.5 | 0 | 15 | 8 |
| D263DVL* | 1/4″ | 4.0 | 6.0 | 0 | 8 | 5 |
| D263DVN* | 1/4″ | 5.0 | 7.5 | 0 | 5 | 2.5 |
| D263DVP* | 1/4″ | 6.0 | 8.5 | 0 | 3 | 1 |

| COILS | |
|---|---|
| code | [Volts/Hz] |
| 7250 | 24V DC |
| 7200 | 24V 50/60Hz |
| 7400 | 110V 50Hz - 120V 60Hz |
| 7600 | 200V 50Hz - 220V 60Hz |
| 7700 | 230V 50Hz - 240V 60Hz |

* NO, manual override and ruby seal versions not available

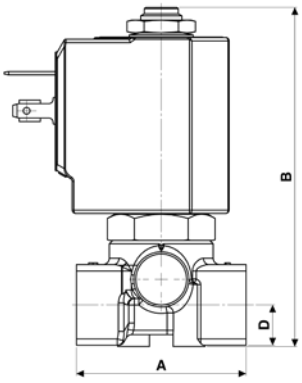


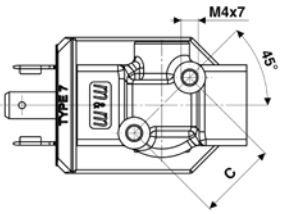


## DIMENSIONS & WEIGHTS

| G connection | A | B | C | D | weight |
|---|---|---|---|---|---|
| [ISO 228 G] | [mm] | [mm] | [mm] | [mm] | [kg] |
| 1/8″ - 1/4″ | 40 | 77.5 | 18.5 | 9.5 | 0.26 |

# 2/2 WAY DIRECT ACTING SOLENOID VALVE, G 1/8″

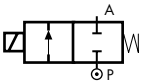


**normally closed**

**TYPE: B297**

## TECHNICAL SPECIFICATIONS

Media ❶: water, oil, air
Media temperature: - 10°C ÷ + 130°C
Ambient temperature: - 10°C ÷ + 50°C
Body material: brass (CW719R EN 12165) low lead content
Orifice material: stainless steel (1.4305 EN 10088/AISI 303)
Operator material: stainless steel
Seal material: foodgrade FKM A80
Coil power: AC 10VA (holding)
AC 16VA (inrush)
DC 7W
Protection class: IP 65 (with connector)

## OPTIONS

Normally open (e.g. code RB297DVC)
Manual override (e.g. code B297DVCM)
EPDM seal for air and hot water MAX 120°C (e.g. code B297DEC)
TEA® electroless nickel plating treatment (e.g. code B297DVEY)
NPT connection upon request (e.g. code B297DVEN)

## NOTES

❶ Valve suitable for contact with food media as per the CEE Directives and Regulations. For more specific information, please contact M&M Sales Department.

## SELECTION TABLE

| VALVE | G connection | nominal diameter | flow rate Kvs | OPD min | OPD max AC | OPD max DC |
|---|---|---|---|---|---|---|
| code | [ISO 228 G] | [mm] | [l/min] | [barg] | [barg] | [barg] |
| B297DVA | 1/8″ | 1.0 | 0.5 | 0 | 30 | 28 |
| B297DVB | 1/8″ | 1.2 | 0.7 | 0 | 25 | 22 |
| B297DVC | 1/8″ | 1.5 | 1.0 | 0 | 22 | 18 |
| B297DVE | 1/8″ | 2.0 | 1.7 | 0 | 18 | 9 |
| B297DVG | 1/8″ | 2.5 | 2.3 | 0 | 13 | 3 |
| B297DVH | 1/8″ | 3.0 | 3.0 | 0 | 8 | 1 |
| | | | | | | |
| | | | | | | |

| COILS | |
|---|---|
| code | [Volts/Hz] |
| 2250 | 24V DC |
| 2200 | 24V 50/60Hz |
| 2400 | 110V 50Hz - 120V 60Hz |
| 2600 | 200V 50Hz - 220V 60Hz |
| 2700 | 230V 50Hz - 240V 60Hz |
| | |
| | |
| | |

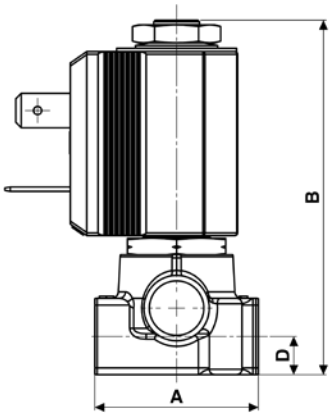


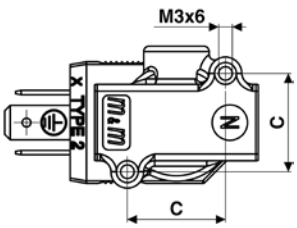


Flow direction overseat 1 → 2

## DIMENSIONS & WEIGHTS

| G connection | A | B | C | D | weight |
|---|---|---|---|---|---|
| [ISO 228 G] | [mm] | [mm] | [mm] | [mm] | [kg] |
| 1/8″ | 30 | 65 | 18 | 7 | 0.15 |
| | | | | | |
| | | | | | |
| | | | | | |
| | | | | | |
| | | | | | |

# 2/2 WAY DIRECT ACTING SOLENOID VALVE, G 1/8″

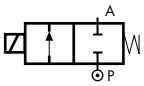


**normally closed**

**TYPE: C 242**



## TECHNICAL SPECIFICATIONS

Media: water, oil, air
Media temperature: - 10°C ÷ + 130°C
Ambient temperature: - 10°C ÷ + 50°C
Body material: brass (CW617N EN 12165)
Operator material: stainless steel
Seal material: foodgrade FKM A80
Coil power: DC 7w
Protection class: IP 65 (with connector)

## OPTIONS

EPDM seal for air and hot water MAX 120°C (e.g. code C 242BEE)

## SELECTION TABLE

| VALVE | G connection | nominal diameter | flow rate Kvs | OPD min | OPD max AC | OPD max DC | COILS | |
|---|---|---|---|---|---|---|---|---|
| code | [ISO 228 G] | [mm] | [l/min] | [barg] | [barg] | [barg] | code | [Volts/Hz] |
| C 242BVE | 1/8″ | 2.0 | 1.5 | 0 | - | 9 | 2150 | 12v DC |
| C 242BVG | 1/8″ | 2.5 | 2.5 | 0 | - | 2 * | 2250 | 24v DC |
| | | | | | | | | |
| | | | | | | | | |
| | | | | | | | | |
| | | | | | | | | |
| | | | | | | | | |
| | | | | | | | | |

* The performance may increase up to max 4 barg. For more information, please contact M&M Sales Department

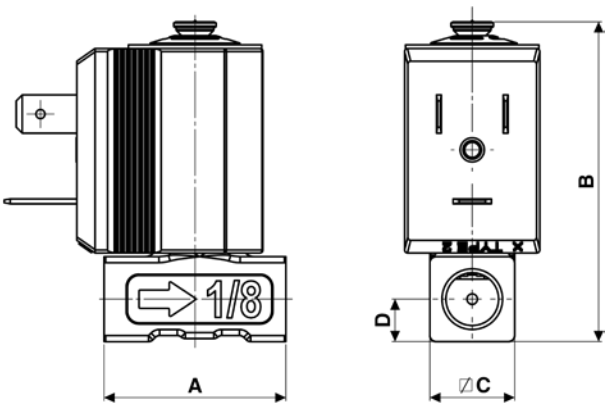


## DIMENSIONS & WEIGHTS

| G connection | A | B | C | D | weight |
|---|---|---|---|---|---|
| [ISO 228 G] | [mm] | [mm] | [mm] | [mm] | [kg] |
| 1/8″ | 30 | 52.7 | 14 | 7 | 0.12 |
| | | | | | |
| | | | | | |
| | | | | | |
| | | | | | |
| | | | | | |

# 3/2 WAY DIRECT ACTING SOLENOID VALVE FOR MANIFOLDING, G 1/8″

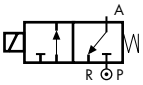


**normally closed**

**TYPE: B919/920/921**

## TECHNICAL SPECIFICATIONS

Media: water, oil, air
Media temperature: -10°C ÷ +130°C
Ambient temperature: -10°C ÷ +50°C
Body material: brass (CW617N EN 12165)
Orifice material: stainless steel (1.4305 EN 10088/AISI 303)
Operator material: stainless steel
Seal material: foodgrade FKM A80
Coil power: AC 10VA (holding)
AC 16VA (inrush)
DC 7W
Protection class: IP 65 (with connector)

## OPTIONS

Normally open (e.g. code RB919CVC)
Assembly plug with silicone O-RING code 883 026 00-
Version 2/2 ways w/o manual override (e.g. code B919DVC)
Pre-assembled manifolds with max 4 valves will be delivered upon request
Manual override (e.g. code B919CVCM)

## OPTION 2/2 WAY

## SELECTION TABLE

| VALVE | G connection | nominal diameter | flow rate Kvs | OPD min | OPD max AC | OPD max DC |
|---|---|---|---|---|---|---|
| code | [ISO 228 G] | [mm] | [l/min] | [barg] | [barg] | [barg] |
| B919CVC | 1/8″ | 1.5 | 1.0 | 0 | 10 | 10 |
| B920CVC | 1/8″ | 1.5 | 1.0 | 0 | 10 | 10 |
| B921CVC | 1/8″ | 1.5 | 1.0 | 0 | 10 | 10 |
| | | | | | | |
| | | | | | | |
| | | | | | | |
| | | | | | | |
| | | | | | | |

| COILS | |
|---|---|
| code | [Volts/Hz] |
| 2250 | 24V DC |
| 2200 | 24V 50/60Hz |
| 2400 | 110V 50Hz - 120V 60Hz |
| 2600 | 200V 50Hz - 220V 60Hz |
| 2700 | 230V 50Hz - 240V 60Hz |
| | |
| | |
| | |

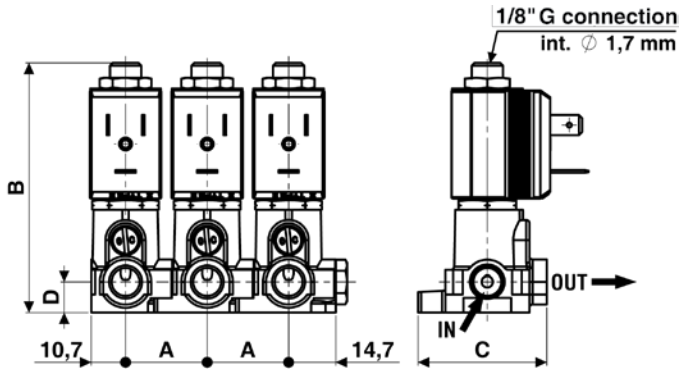


## DIMENSIONS & WEIGHTS

| G connection | A | B | C | D | weight |
|---|---|---|---|---|---|
| [ISO 228 G] | [mm] | [mm] | [mm] | [mm] | [kg] |
| 1/8″ | 25.4 | 77.7 | 40.1 | 9.5 | 0.18 |
| | | | | | |
| | | | | | |
| | | | | | |
| | | | | | |
| | | | | | |

# 3/2 WAY DIRECT ACTING SOLENOID VALVE, FLANGE 32x32

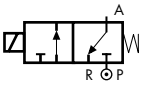


**normally closed**

**TYPE: D301**



## TECHNICAL SPECIFICATIONS

Media: water, oil, air
Media temperature: -10°C ÷ +130°C
Ambient temperature: -10°C ÷ +50°C
Body material: brass (CW617N EN 12165)
Orifice material: stainless steel (1.4305 EN 10088/AISI 303)
Operator material: stainless steel
Seal material: foodgrade FKM A80
Coil power: AC 18VA (holding)
AC 36VA (inrush)
DC 14W
Protection class: IP 65 (with connector)

## OPTIONS

Normally open with class "H" coils only (e.g. code RD301CVG)
Manual override (e.g. code D301AVCM)
EPDM seal for air and hot water MAX 120°C (e.g. code D301CEC)
Ruby seal -10°C +180°C for high temperature with class "H" coils only (e.g. code D301ARB 7201)
Armature tube with spherical 1/8" G connection (e.g. code D301AVC)
Armature tube with hose tail ø 6 mm (e.g. code D301EVE)

## SELECTION TABLE

| VALVE | square base | nominal diameter | flow rate Kvs | OPD min | OPD max AC | OPD max DC |
|---|---|---|---|---|---|---|
| code | [mm] | [mm] | [l/min] | [barg] | [barg] | [barg] |
| D301CVC | 32x32 | 1.5 | 1.3 | 0 | 18 | 18 |
| D301CVE | 32x32 | 2.0 | 2.2 | 0 | 10 | 10 |
| D301CVG | 32x32 | 2.5 | 3.4 | 0 | 7 | 7 |
| | | | | | | |
| | | | | | | |
| | | | | | | |
| | | | | | | |
| | | | | | | |

| COILS | |
|---|---|
| code | [Volts/Hz] |
| 7250 | 24v DC |
| 7200 | 24v 50/60Hz |
| 7400 | 110v 50Hz - 120v 60Hz |
| 7600 | 200v 50Hz - 220v 60Hz |
| 7700 | 230v 50Hz - 240v 60Hz |
| | |
| | |
| | |

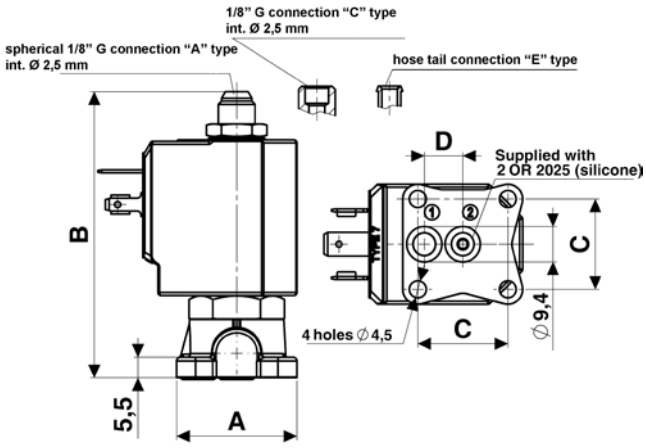


## DIMENSIONS & WEIGHTS

| Valve | A | B | C | D | weight |
|---|---|---|---|---|---|
| [mm] | [mm] | [mm] | [mm] | [mm] | [kg] |
| D301 | 32 | 77 | 24 | 10.25 | 0.25 |
| | | | | | |
| | | | | | |
| | | | | | |
| | | | | | |
| | | | | | |

# 3/2 WAY DIRECT ACTING SOLENOID VALVE, G 1/8″ - G 1/4″

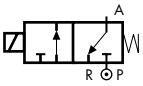


**normally closed**

**TYPE: D362/363**

## TECHNICAL SPECIFICATIONS

Media: water, oil, air
Media temperature: -10°C ÷ +130°C
Ambient temperature: -10°C ÷ +50°C
Body material: brass (CW617N EN 12165)
Orifice material: stainless steel (1.4305 EN 10088/AISI 303)
Operator material: stainless steel
Seal material: FKM
Coil power: AC 18VA (holding)
AC 36VA (inrush)
DC 14W
Protection class: IP 65 (with connector)

## OPTIONS

Normally open with class "H" coils only (e.g. code RD362CVC)
Manual override (e.g. code D362CVGM) only up to Ø 3 mm orifice
EPDM seal for air and hot water MAX 120°C (e.g. code D363CEC)
Ruby seal -10°C +180°C for high temperature with class "H" coils only (e.g. code D363ARB 7201) only up to Ø 3 mm orifice
Armature tube with spherical 1/8" G connection (e.g. code D362AVC)
EEX proof version (please see page 43 for more information)

## SELECTION TABLE

| VALVE | G connection | nominal diameter | flow rate Kvs | OPD min | OPD max AC | OPD max DC |
|---|---|---|---|---|---|---|
| code | [ISO 228 G] | [mm] | [l/min] | [barg] | [barg] | [barg] |
| D362CVC | 1/8″ | 1.5 | 1.3 | 0 | 18 | 18 |
| D362CVE | 1/8″ | 2.0 | 2.2 | 0 | 10 | 10 |
| D362CVG | 1/8″ | 2.5 | 3.4 | 0 | 7 | 7 |
| D363CVC | 1/4″ | 1.5 | 1.3 | 0 | 18 | 18 |
| D363CVE | 1/4″ | 2.0 | 2.2 | 0 | 10 | 10 |
| D363CVG | 1/4″ | 2.5 | 3.4 | 0 | 7 | 7 |
| D363CVH | 1/4″ | 3.0 | 4.5 | 0 | 5 | 5 |
| D363CVL * | 1/4″ | 4.0 | 6.0 | 0 | 3.5 | 3.5 |
| D363CVN * | 1/4″ | 5.0 | 7.5 | 0 | 2.5 | 2.5 |
| D363CVP * | 1/4″ | 6.0 | 8.5 | 0 | 1.5 | 1.5 |

| COILS | |
|---|---|
| code | [Volts/Hz] |
| 7250 | 24V DC |
| 7200 | 24V 50/60Hz |
| 7400 | 110V 50Hz - 120V 60Hz |
| 7600 | 200V 50Hz - 220V 60Hz |
| 7700 | 230V 50Hz - 240V 60Hz |

* NO, manual override and Ruby seal versions not available

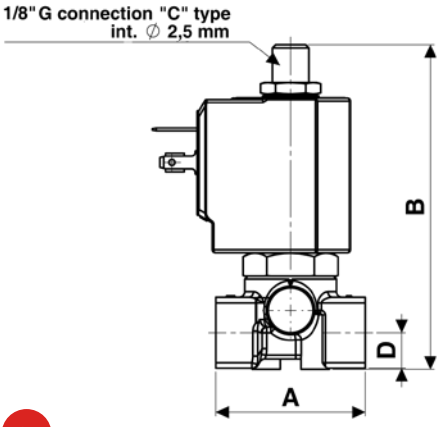


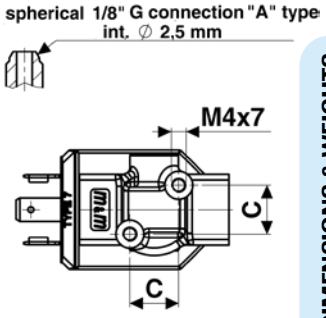


Flow direction underseat 2 → 1

## DIMENSIONS & WEIGHTS

| G connection | A | B | C | D | weight |
|---|---|---|---|---|---|
| [ISO 228 G] | [mm] | [mm] | [mm] | [mm] | [kg] |
| 1/8″ - 1/4″ | 40 | 87 | 13 | 9.5 | 0.25 |

# 3/2 WAY DIRECT ACTING SOLENOID VALVE, G 1/8″

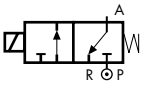


**normally closed**

**TYPE: B397**

## TECHNICAL SPECIFICATIONS

Media ❶: water, oil, air
Media temperature: -10°C ÷ +130°C
Ambient temperature: -10°C ÷ +50°C
Body material: brass (CW617N EN 12165)
Orifice material: stainless steel (1.4305 EN 10088/AISI 303)
Operator material: stainless steel
Seal material: foodgrade FKM A80
Coil power: AC 10VA (holding)
AC 16VA (inrush)
DC 7W
Protection class: IP 65 (with connector)

## OPTIONS

Normally open (e.g. code RB397CVE)
Manual override (e.g. code B397CVBM)
EPDM seal for air and hot water MAX 120°C (e.g. code B397CEC)
Armature tube with hose tail Ø 6 mm (e.g. code B397EVE)
Electroless nickel plating treatment (e.g. code B397CVCK)
TEA® electroless nickel plating treatment (e.g. code B397CVCY)

## NOTES

❶ Valve suitable for contact with food media as per the CEE Directives and Regulations. For more specific information, please contact M&M Sales Department.

## SELECTION TABLE

| VALVE | G connection | nominal diameter | flow rate Kvs | OPD min | OPD max AC | OPD max DC |
|---|---|---|---|---|---|---|
| code | [ISO 228 G] | [mm] | [l/min] | [barg] | [barg] | [barg] |
| B397CVA | 1/8″ | 1.0 | 0.5 | 0 | 18 | 18 |
| B397CVB | 1/8″ | 1.2 | 0.7 | 0 | 15 | 15 |
| B397CVC | 1/8″ | 1.5 | 1.0 | 0 | 10 | 10 |
| B397CVE | 1/8″ | 2.0 | 1.9 | 0 | 5 | 5 |
| B397CVH | 1/8″ | 3.0 | 3.5 | 0 | 2 | 2 |
| | | | | | | |
| | | | | | | |

| COILS | |
|---|---|
| code | [Volts/Hz] |
| 2250 | 24V DC |
| 2200 | 24V 50/60Hz |
| 2400 | 110V 50Hz - 120V 60Hz |
| 2600 | 200V 50Hz - 220V 60Hz |
| 2700 | 230V 50Hz - 240V 60Hz |
| | |
| | |

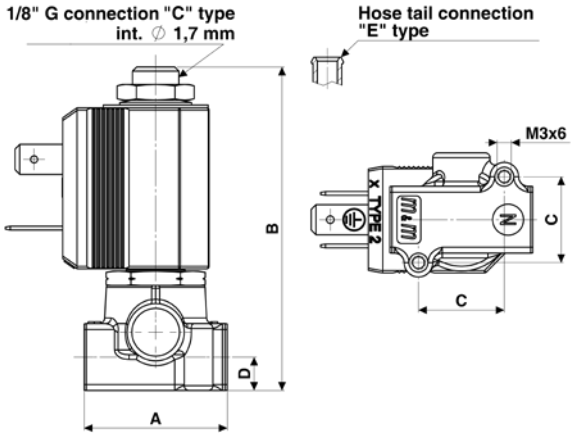


## DIMENSIONS & WEIGHTS

| G connection | A | B | C | D | weight |
|---|---|---|---|---|---|
| [ISO 228 G] | [mm] | [mm] | [mm] | [mm] | [kg] |
| 1/8″ | 30 | 67.8 | 18 | 7 | 0.15 |
| | | | | | |
| | | | | | |
| | | | | | |
| | | | | | |
| | | | | | |

# 2/2 WAY DIRECT ACTING SOLENOID VALVE, G 1/4″

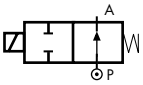


**normally open**

**TYPE: RD236**

## TECHNICAL SPECIFICATIONS

Media: water, oil, air
Media temperature: -10°C ÷ +130°C
Ambient temperature: -10°C ÷ +50°C
Body material: brass (CW617N EN 12165)
Orifice material: stainless steel (1.4305 EN 10088/AISI 303)
Operator material: stainless steel
Main seal material: foodgrade FKM A80
Coil power: AC 18VA (holding)
AC 36VA (inrush)
DC 14W
Protection class: IP 65 (with connector)

## OPTIONS

EPDM seal for air and hot water MAX 120°C (e.g. code RD236DEC)
Ruby seal (for liquids only) -10°C +180°C for high temperature and for high pressure with coils class "H" only:
RD236DRH 7201 max OPD AC/DC 30 barg,
RD236DRA 7701 max OPD AC/DC 150 barg

## SELECTION TABLE

| VALVE | G connection | nominal diameter | flow rate Kvs | OPD min | OPD max AC | OPD max DC |
|---|---|---|---|---|---|---|
| code | [ISO 228 G] | [mm] | [l/min] | [barg] | [barg] | [barg] |
| RD236DVA | 1/4″ | 1.0 | 0.5 | 0 | 30 | 30 |
| RD236DVC | 1/4″ | 1.5 | 1.3 | 0 | 20 | 20 |
| RD236DVG | 1/4″ | 2.5 | 2.8 | 0 | 15 | 15 |
| RD236DVH | 1/4″ | 3.0 | 3.5 | 0 | 12 | 12 |
| RD236DVM | 1/4″ | 4.5 | 5.5 | 0 | 5 | 5 |

| COILS | |
|---|---|
| code | [Volts/Hz] |
| 7250 | 24V DC |
| 7200 | 24V 50/60Hz |
| 7400 | 110V 50Hz - 120V 60Hz |
| 7600 | 200V 50Hz - 220V 60Hz |
| 7700 | 230V 50Hz - 240V 60Hz |

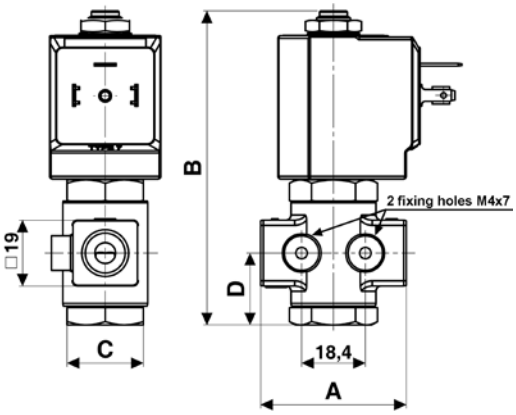


## DIMENSIONS & WEIGHTS

| G connection | A | B | C | D | weight |
|---|---|---|---|---|---|
| [ISO 228 G] | [mm] | [mm] | [mm] | [mm] | [kg] |
| 1/4″ | 42 | 91 | Hex 22 | 20.75 | 0.25 |

AIR TREATMENT

# 2/2 WAY DIRECT ACTING SOLENOID VALVE, G 1/8″

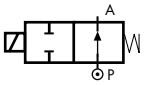


**normally open**

**TYPE: RD213**

## TECHNICAL SPECIFICATIONS

Media: water, oil, air
Media temperature: -10°C ÷ +130°C
Ambient temperature: -10°C ÷ +50°C
Body material: brass (CW617N EN 12165)
Operator material: stainless steel
Main seal material: foodgrade FKM A80
Coil power: AC 18VA (holding)
AC 36VA (inrush)
DC 14W
Protection class: IP 65 (with connector)

## OPTIONS

EPDM seal for air and hot water MAX 120°C (e.g. code RD213CEG)
Armature tube with hose tail Ø 6 mm (e.g. code RD213AVG)

AIR TREATMENT

## SELECTION TABLE

| VALVE | G connection | nominal diameter | flow rate Kvs | OPD min | OPD max AC | OPD max DC |
|---|---|---|---|---|---|---|
| code | [ISO 228 G] | [mm] | [l/min] | [barg] | [barg] | [barg] |
| RD213CVG | 1/8″ | 2.5 | 2.4 | 0 | 16 | 16 |
| | | | | | | |
| | | | | | | |
| | | | | | | |
| | | | | | | |
| | | | | | | |
| | | | | | | |
| | | | | | | |

| COILS | |
|---|---|
| code | [Volts/Hz] |
| 7250 | 24V DC |
| 7200 | 24V 50/60Hz |
| 7400 | 110V 50Hz - 120V 60Hz |
| 7600 | 200V 50Hz - 220V 60Hz |
| 7700 | 230V 50Hz - 240V 60Hz |
| | |
| | |
| | |

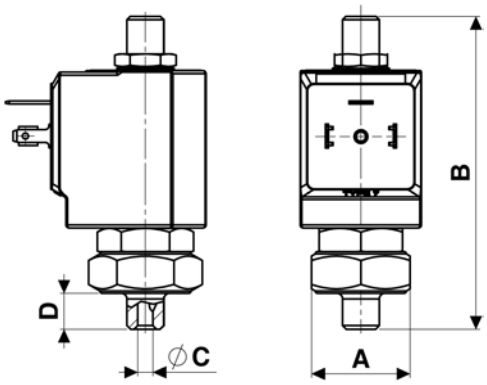


## DIMENSIONS & WEIGHTS

| G connection | A | B | C | D | weight |
|---|---|---|---|---|---|
| [ISO 228 G] | [mm] | [mm] | [mm] | [mm] | [kg] |
| 1/8″ | Hex 26 | 82.5 | 4 | 9.5 | -- |
| | | | | | |
| | | | | | |
| | | | | | |
| | | | | | |
| | | | | | |

# 2/2 WAY DIRECT ACTING SOLENOID VALVE, G 1/8″

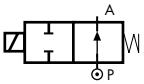


**normally open**

**TYPE: RB214**

## TECHNICAL SPECIFICATIONS

Media: water, oil, air
Media temperature: -10°C ÷ +130°C
Ambient temperature: -10°C ÷ +50°C
Body material: brass (CW617N EN 12165)
Operator material: stainless steel
Main seal material: foodgrade FKM A80
Coil power: AC 10VA (holding)
AC 16VA (inrush)
DC 7W
Protection class: IP 65 (with connector)

## OPTIONS

EPDM seal for air and hot water MAX 120°C (e.g. code RB214CED)
Armature tube with hose tail Ø 6 mm (e.g. code RB214EVD)
NC version available upon request (e.g. code B214EVB)

## SELECTION TABLE

| VALVE | G connection | nominal diameter | flow rate Kvs | OPD min | OPD max AC | OPD max DC |
|---|---|---|---|---|---|---|
| code | [ISO 228 G] | [mm] | [l/min] | [barg] | [barg] | [barg] |
| RB214CVD | 1/8″ | 1.7 | 1.2 | 0 | 14 | 14 |
| | | | | | | |
| | | | | | | |
| | | | | | | |
| | | | | | | |
| | | | | | | |
| | | | | | | |
| | | | | | | |

| COILS | |
|---|---|
| code | [Volts/Hz] |
| 2250 | 24V DC |
| 2200 | 24V 50/60Hz |
| 2400 | 110V 50Hz - 120V 60Hz |
| 2600 | 200V 50Hz - 220V 60Hz |
| 2700 | 230V 50Hz - 240V 60Hz |
| | |
| | |
| | |

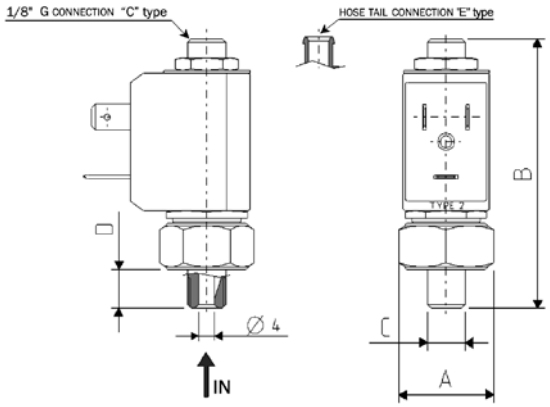


## DIMENSIONS & WEIGHTS

| G connection | A | B | C | D | weight |
|---|---|---|---|---|---|
| [ISO 228 G] | [mm] | [mm] | [mm] | [mm] | [kg] |
| 1/8″ | 21 | 65.7 | 1/8" | 9.5 | |
| | | | | | |
| | | | | | |
| | | | | | |
| | | | | | |
| | | | | | |

# 2/2 WAY DIRECT ACTING SOLENOID VALVE, FLANGE 32x32

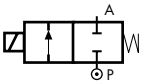


**normally closed**

**TYPE: D201**

## TECHNICAL SPECIFICATIONS

Media: water, oil, air
Media temperature: -10°C ÷ +130°C
Ambient temperature: -10°C ÷ +50°C
Body material: brass (CW617N EN 12165)
Orifice material: stainless steel (1.4305 EN 10088/AISI 303)
Operator material: stainless steel
Seal material: foodgrade FKM A80
Coil power: AC 18VA (holding)
AC 36VA (inrush)
DC 14W
Protection class: IP 65 (with connector)

## OPTIONS

Normally open with class "H" coils only (e.g. code RD201DVC)
Manual override (e.g. code D201DVGM)
EPDM seal for air and hot water MAX 120°C (e.g. code D201DEC)
Ruby seal -10°C +180°C for high temperature with class "H" coils only (e.g. code D201DRG 7201)
Available with brass body, Ø 2 mm machined orifice only, Kalrez seal, PTFE O-Ring (please see the drawing below).
For more information, please contact M&M Sales Department.

AIR TREATMENT

## SELECTION TABLE

| VALVE | square base | nominal diameter | flow rate Kvs | OPD min | OPD max AC | OPD max DC |
|---|---|---|---|---|---|---|
| code | [mm] | [mm] | [l/min] | [barg] | [barg] | [barg] |
| D201DVC | 32x32 | 1.5 | 1.3 | 0 | 24 | 24 |
| D201DVE | 32x32 | 2.0 | 2.2 | 0 | 20 | 20 |
| D201DVG | 32x32 | 2.5 | 3.4 | 0 | 18 | 18 |
| | | | | | | |
| | | | | | | |
| | | | | | | |
| | | | | | | |
| | | | | | | |

| COILS | |
|---|---|
| code | [Volts/Hz] |
| 7250 | 24V DC |
| 7200 | 24V 50/60Hz |
| 7400 | 110V 50Hz - 120V 60Hz |
| 7600 | 200V 50Hz - 220V 60Hz |
| 7700 | 230V 50Hz - 240V 60Hz |
| | |
| | |
| | |

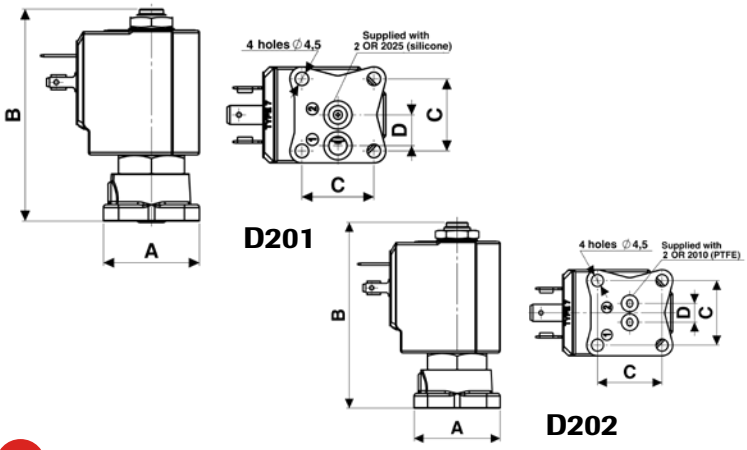


## DIMENSIONS & WEIGHTS

| code | A | B | C | D | weight |
|---|---|---|---|---|---|
| [mm] | [mm] | [mm] | [mm] | [mm] | [kg] |
| D201 | 32 | 70.6 | 24 | 10.25 | 0.25 |
| D202 | 32 | 70 | 24 | 7 | 0.2 |
| | | | | | |
| | | | | | |
| | | | | | |
| | | | | | |

# 2/2 WAY DIRECT ACTING SOLENOID VALVE, G 1/4″

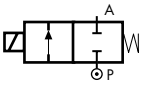


**normally closed**

**TYPE: D249**

## TECHNICAL SPECIFICATIONS

Media: water, oil, air
Media temperature: -10°C ÷ +130°C
Ambient temperature: -10°C ÷ +50°C
Body material: brass (CW617N EN 12165)
Operator material: stainless steel
Seal material: FKM
Coil power: AC 18VA (holding)
AC 36VA (inrush)
DC 14W
Protection class: IP 65 (with connector)

## SELECTION TABLE

| VALVE | G connection | nominal diameter | flow rate Kvs | OPD min | OPD max AC | OPD max DC |
|---|---|---|---|---|---|---|
| code | [ISO 228 G] | [mm] | [l/min] | [barg] | [barg] | [barg] |
| D249DVD | 1/4″ | 1.7 | 1.5 | 0 | 25 | 24 |
| D249DVF | 1/4″ | 2.2 | 2.4 | 0 | 18 | 16 |
| D249DVH | 1/4″ | 3.0 | 4.5 | 0 | 10 | 6 |

| COILS | |
|---|---|
| code | [Volts/Hz] |
| 7250 | 24V DC |
| 7200 | 24V 50/60Hz |
| 7400 | 110V 50/60Hz |
| 7600 | 200V 50Hz - 220V 60Hz |
| 7700 | 230V 50Hz - 240V 60Hz |

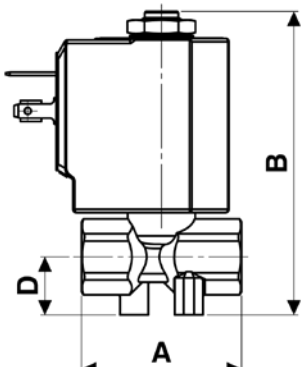


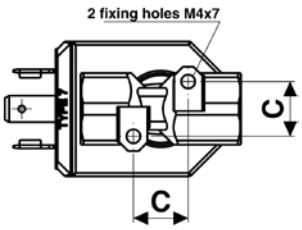


## DIMENSIONS & WEIGHTS

| G connection | A | B | C | D | weight |
|---|---|---|---|---|---|
| [ISO 228 G] | [mm] | [mm] | [mm] | [mm] | [kg] |
| 1/4″ | 38 | 72.1 | 13 | 13.8 | 0.18 |